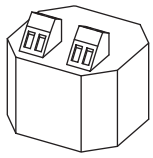

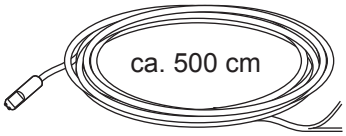
ca. 500 cm

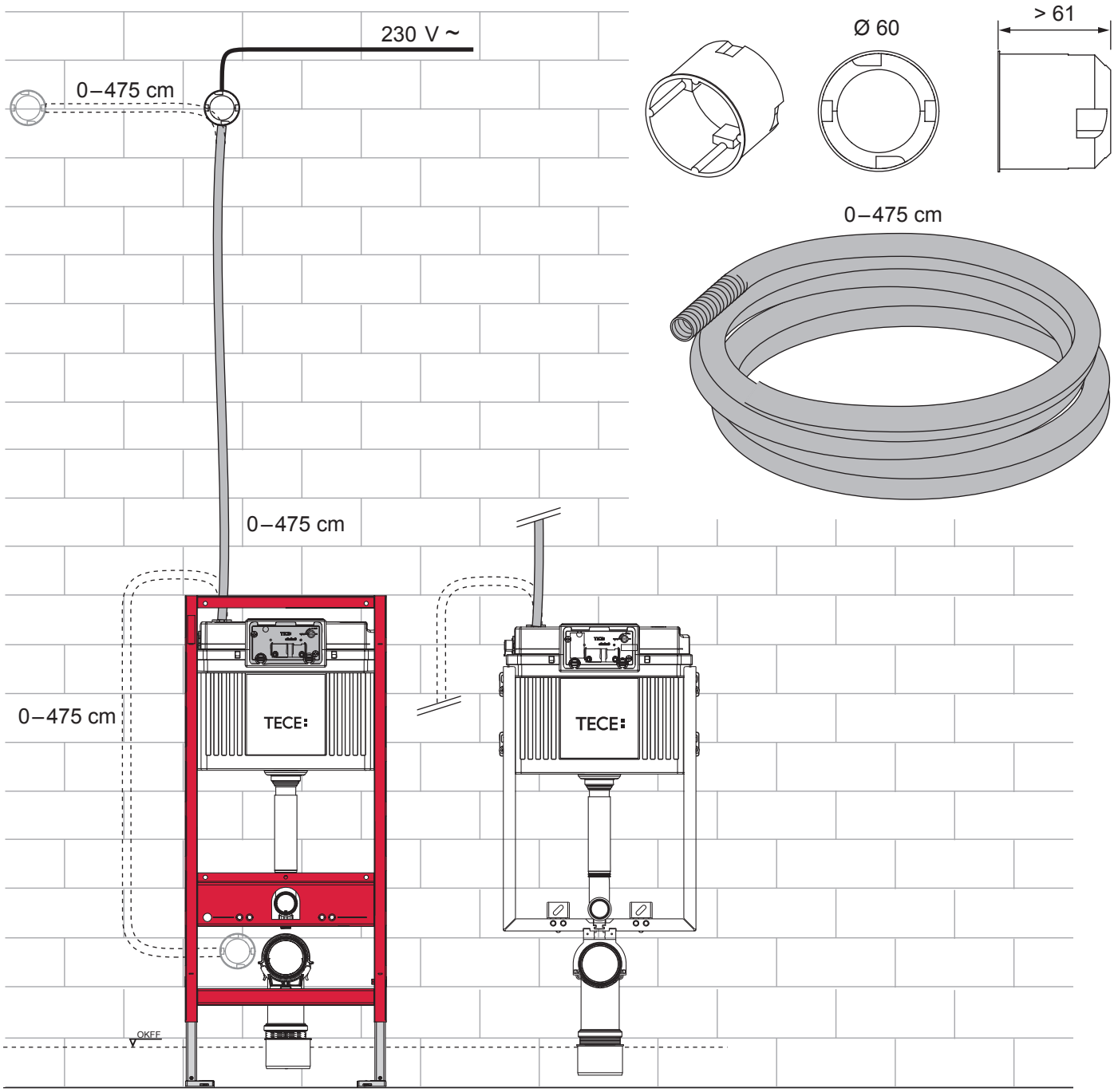
230 V ~
0–475 cm
Ø 60
> 61
0–475 cm
0–475 cm
0–475 cm
TECE
TECE
OKFF

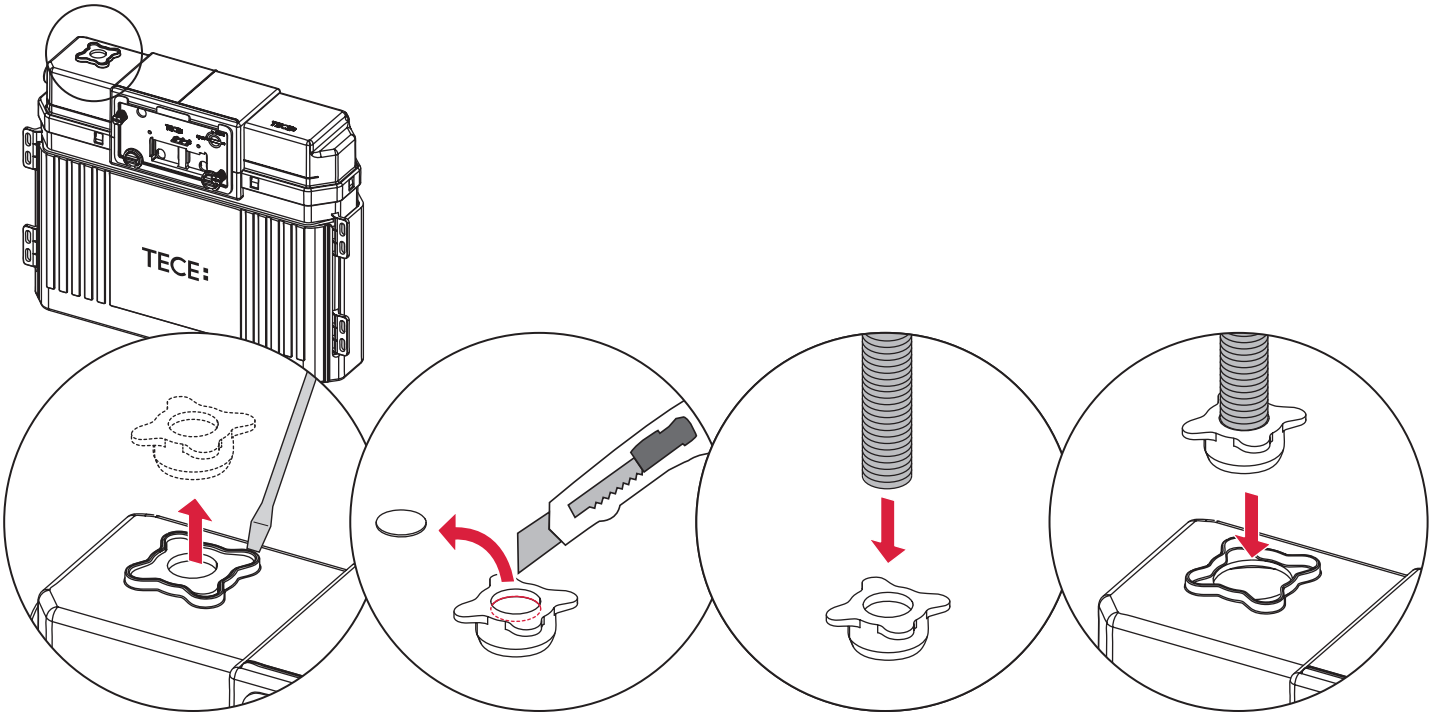
TECE:

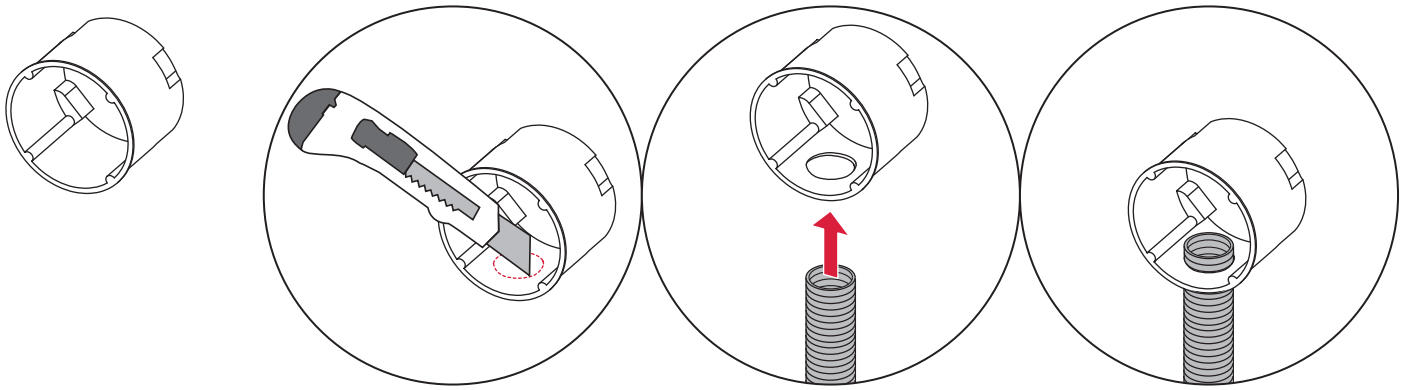

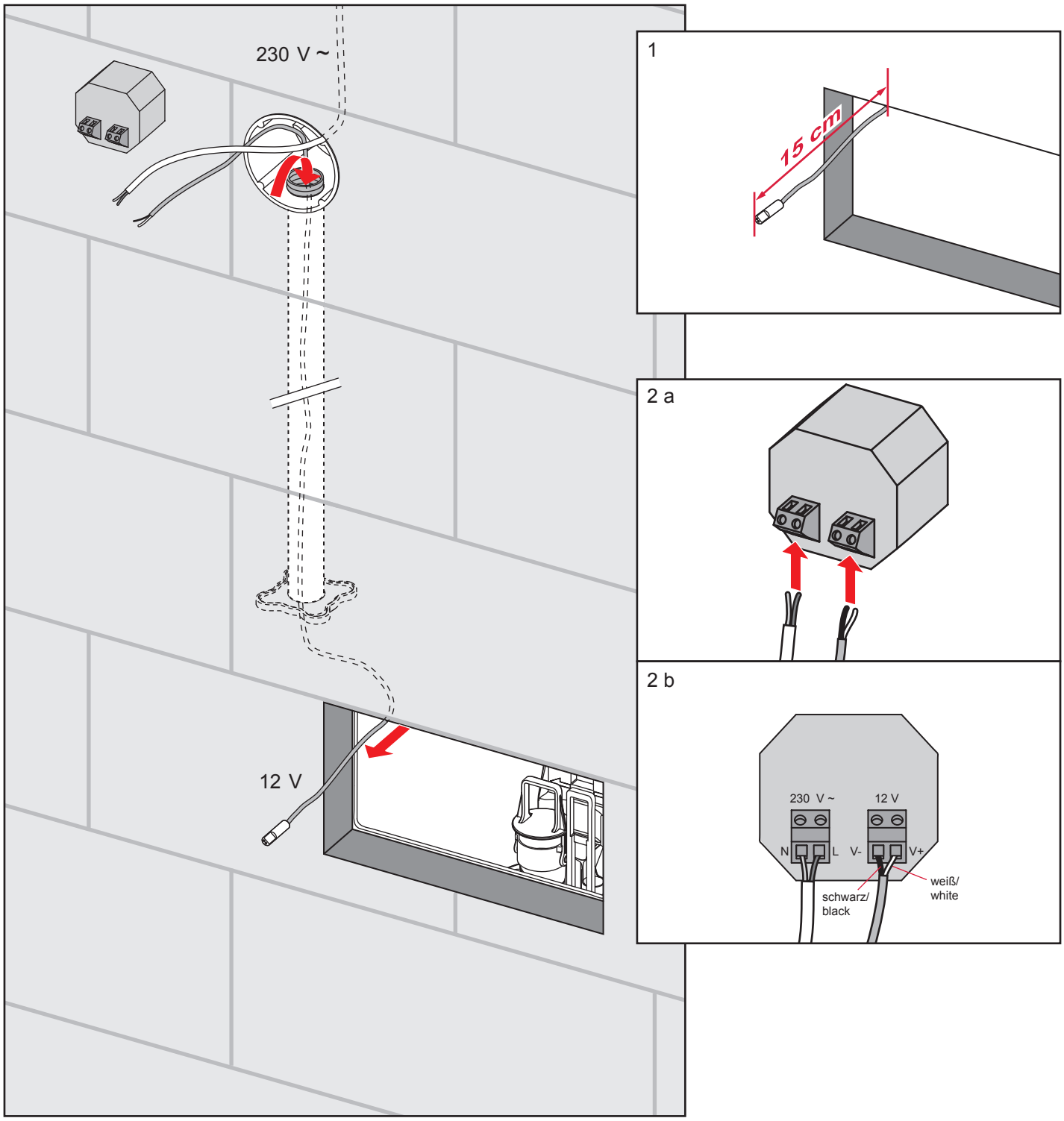
230 V ~
12 V
1
15 cm
2 a
2 b
230 V ~
12 V
N
L
V-
V+
schwarz/
black
weiß/
white

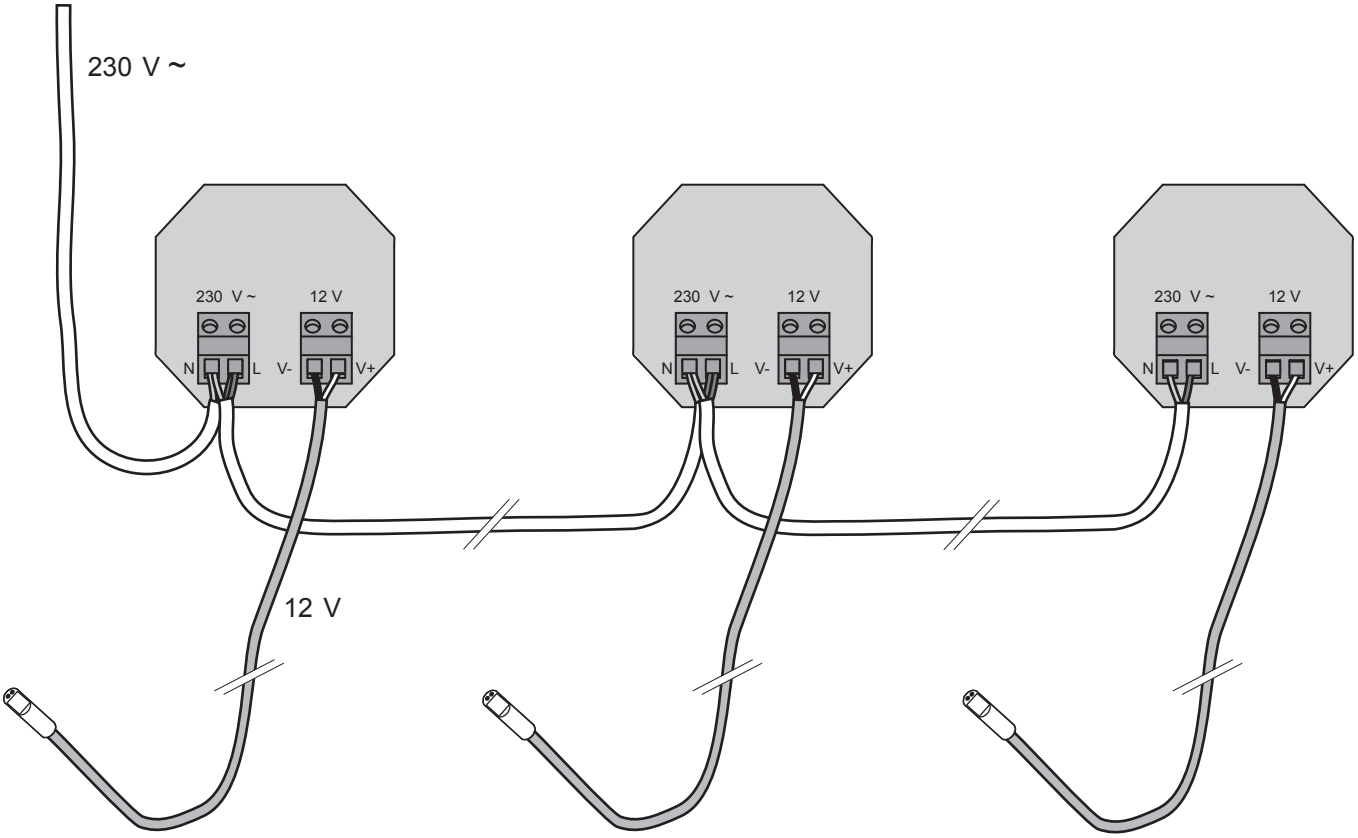

SP430 078 00 d